Electrolux PROFESSIONAL

Modular Cooking Range Line thermaline 80 - 600 mm Cupboard base with 1 door, GN conform, 1 Side (H2) - H=550

ITEM #

MODEL #

NAME #

SIS #

AIA #

588225 (MA1DDAFOOO) Cupboard Base with 1 door, one-side operated, GN - H2

Short Form Specification

Item No.

600 mm wide cupboard base with 1 door with hygienic design and round edges. Internal frame for heavy duty sturdiness in stainless steel. Flat surface construction, easily cleanable. Cupboard storage space accepts GN 1/1 containers.
IPX5 water resistant certification.
Configuration: One-side operated freestanding base, hygienic class H2.

Main Features

- Cupboard compartment for storage of pots, pans, sheet pans etc.
- All major components may be easily accessed from the front.
- THERMODUL connection system creates a seamless work top when units are connected to each other thus avoiding soil penetrating vital components and facilitating the removal of units in case of replacement or service.
- Unit constructed according to DIN 18860_2 with 70 mm recessed plinth.

Construction

- IPX5 water resistance certification.
- Hygienic design of the base cupboard with large round edges.
- 2 mm top in 1.4301 (AISI 304).
- Flat surface construction with minimal hidden areas to easily clean all surfaces
- Storage space in the base of the appliance accepts GN1/1 containers.
- Internal frame for heavy duty sturdiness in stainless steel.

APPROVAL:

Modular Cooking Range Line
thermaline 80 - 600 mm Cupboard base with 1 door, GN conform, 1 Side (H2) - H=550

Front

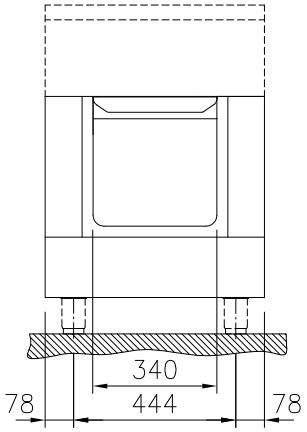

Side

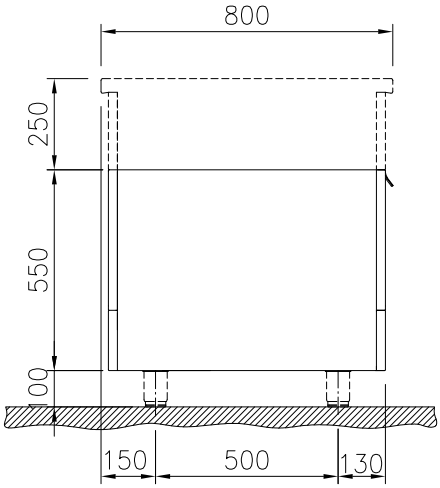

Top

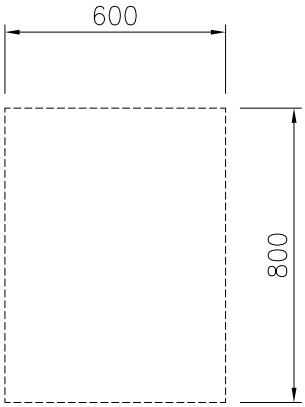

Key Information:

External dimensions, Width:	
588225 (MA1DDAFOOO)	600 mm
External dimensions, Depth:	800 mm
External dimensions, Height:	550 mm
Cupboard Cavity Dimensions (width):	340 mm
Cupboard Cavity Dimensions (height):	330 mm
Cupboard Cavity Dimensions (depth):	715 mm
Net weight:	24 kg

The company reserves the right to make modifications to the products without prior notice. All information correct at time of printing.

2024.10.06

Optional Accessories

- Stainless steel side panel, 800x800mm, freestanding — PNC 912508 ❑
- Stainless steel front kicking strip, 600mm width — PNC 912596 ❑
- Stainless steel side kicking strips left and right, freestanding, 800mm width — PNC 912619 ❑
- Stainless steel side kicking strips left and right, against the wall, 800mm width — PNC 912622 ❑
- Stainless steel side kicking strips left and right, back-to-back, 1610mm width — PNC 912625 ❑
- Stainless steel plinth, against wall, 600mm width — PNC 912804 ❑
- Stainless steel plinth, freestanding, 600mm width — PNC 912823 ❑
- Stainless steel panel, 800x800mm, against wall, left side — PNC 913094 ❑
- Stainless steel panel, 800x800mm, flush-fitting, against wall, right side — PNC 913098 ❑
- Back panel, 600x450mm, for bases one-side operated — PNC 913180 ❑
- Stainless steel side panel, left, h=800 — PNC 913216 ❑
- Stainless steel side panel, right, h=800 — PNC 913217 ❑
- Perforated shelf for warming cabinets and cupboard bases (one-side operated TL80-85-90 and two-side operated for TL80) — PNC 913233 ❑
- Side reinforced panel only in combination with side shelf, for freestanding units — PNC 913257 ❑
- Side reinforced panel only in combination with side shelf for against the wall installations, left — PNC 913264 ❑
- Side reinforced panel only in combination with side shelf, for against the wall installations, right — PNC 913266 ❑
- Side reinforced panel only in combination with side shelf, for back-to-back installations, left — PNC 913273 ❑
- Side reinforced panel only in combination with side shelf, for back-to-back installation, right — PNC 913274 ❑
- Shelf fixation for TL80-85-90 one-side operated, TL80 two-side operated — PNC 913279 ❑
- Stainless steel dividing panel, 800x800mm, (it should only be used between Electrolux Professional thermaline Modular 80 and thermaline C80) — PNC 913669 ❑
- Stainless steel side panel, 800x800mm, flush-fitting (it should only be used against the wall, against a niche and in between Electrolux Professional thermaline and ProThermetic appliances and external appliances - provided that these have at least the same dimensions) — PNC 913685 ❑

The company reserves the right to make modifications to the products without prior notice. All information correct at time of printing.